BRAVAT
BY DIETSCHE 1873

AF-8001
Affability Shower on Rail

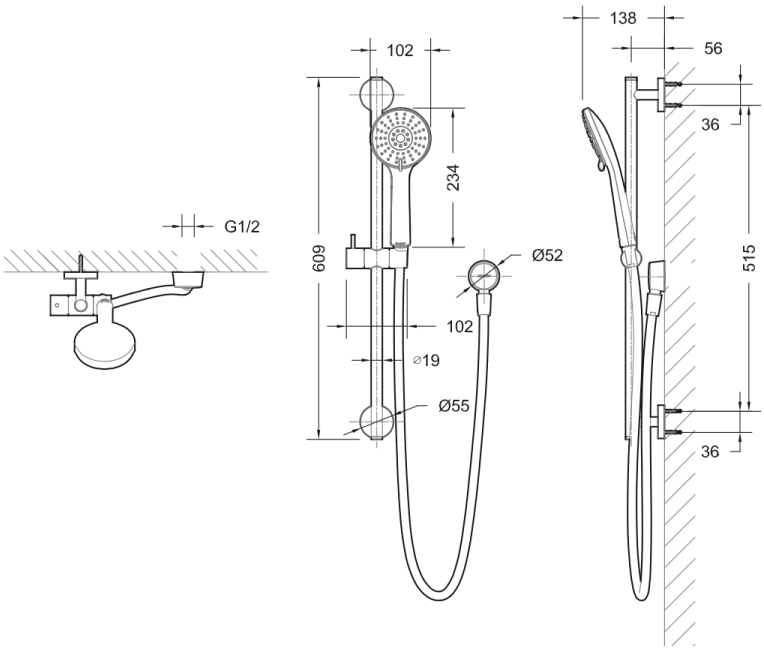

FINISH: Chrome

CONSTRUCTION: Super Brass

CONNECTION: 1/2Ø BSP Female

WORKING PRESSURES: 150 - 500 Kpa

OPERATING TEMPERATURE: 5°C - 70°C

WELS RATING: 3 Star - 9L/Min

Warranty: 15 Years Warranty & Lifetime on cartridge* (Terms & Conditions Apply)

Super Brass

3MM Thickness Brass

200H NSS PASS

Bravat Care: For all domestic tap ware products include a 5 Year Parts and Labour warranty & Lifetime on Cartridge replacement* (Terms & Conditions Apply)

BRAVAT Global 1800 272 828 I info@bravataustralia.com.au